SUPERPOSITION THEOREM

CIRCUIT ANALYSIS METHOD

prepared by:

Gyro A. Madrona

Electronics Engineer

GRADING SYSTEM

FINAL GRADE

30%

PRELIM

30%

MIDTERM

40%

ENDTERM

TERM GRADE

50%

WEEKLY

50%

EXAM

100%

LABORATORY

PENALTY

0

ABSENT

3

45-min LATE

7 max

15-min LATE

TOPIC OUTLINE

Analogy

Superposition Theorem

ANALOGY

ANALOGY

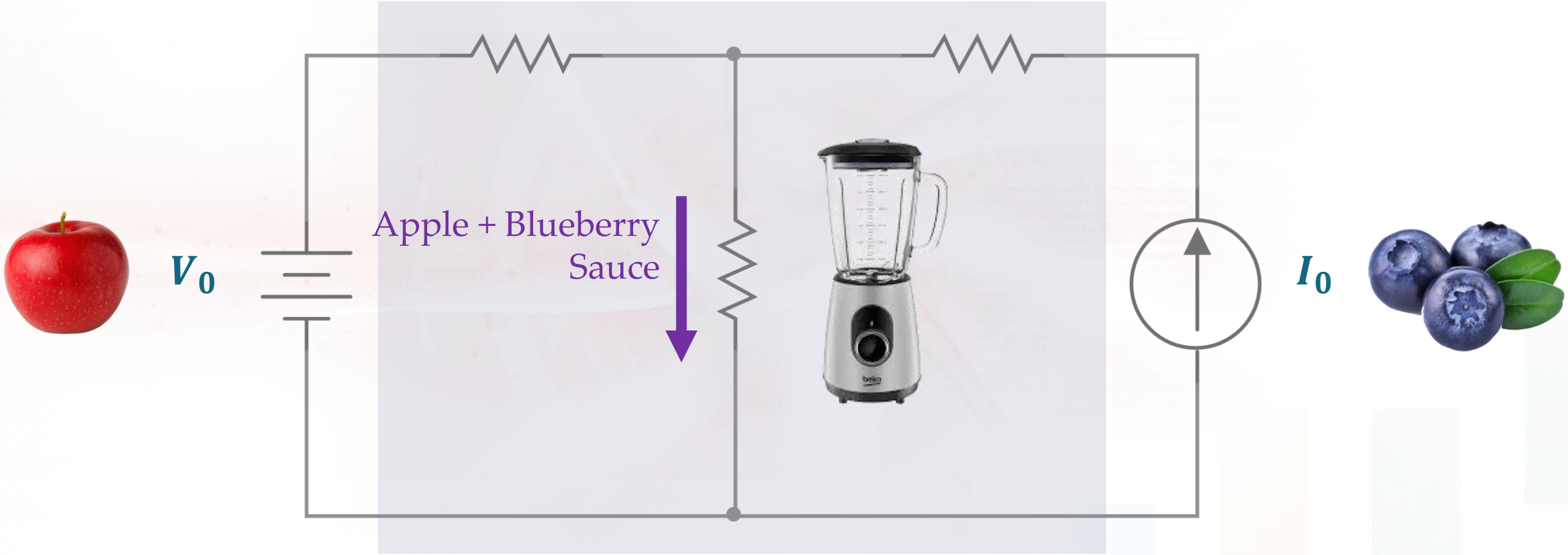
V_0
Apple + Blueberry Sauce
I_0

ANALOGY

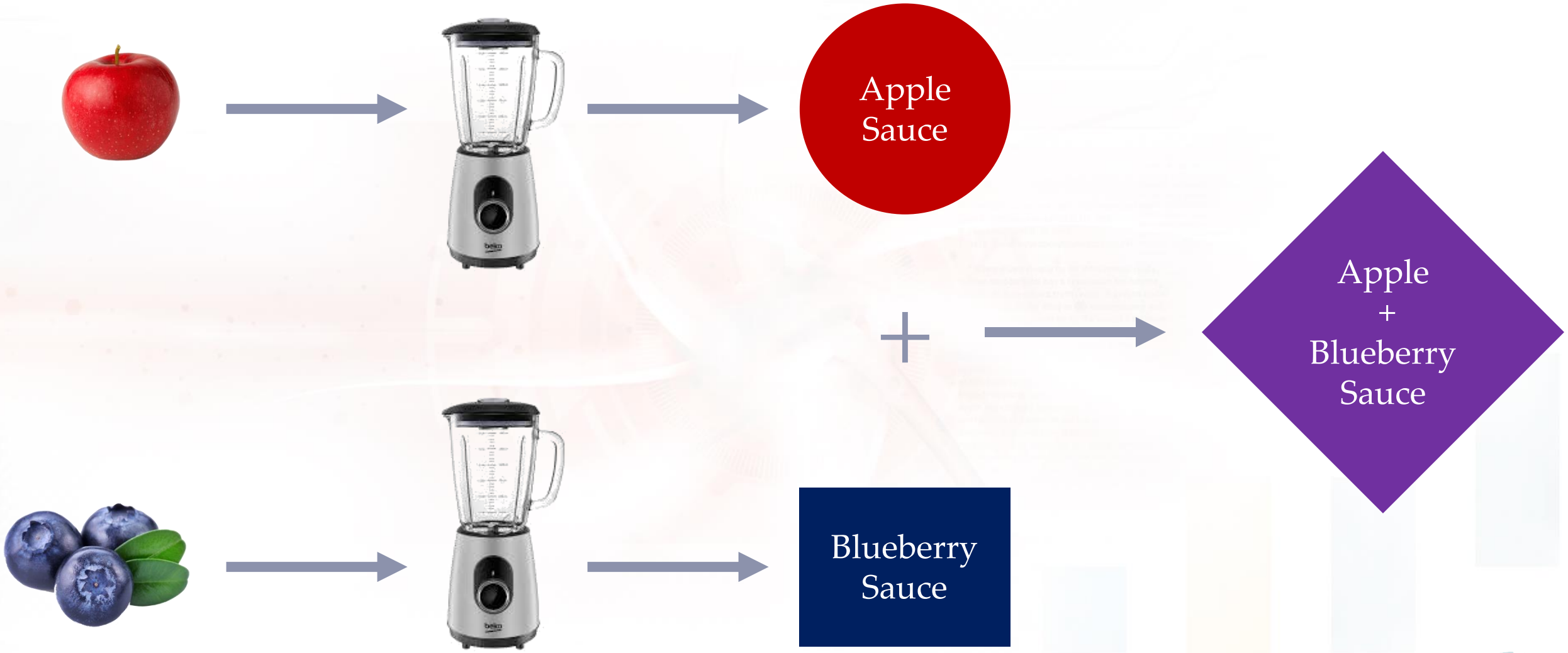

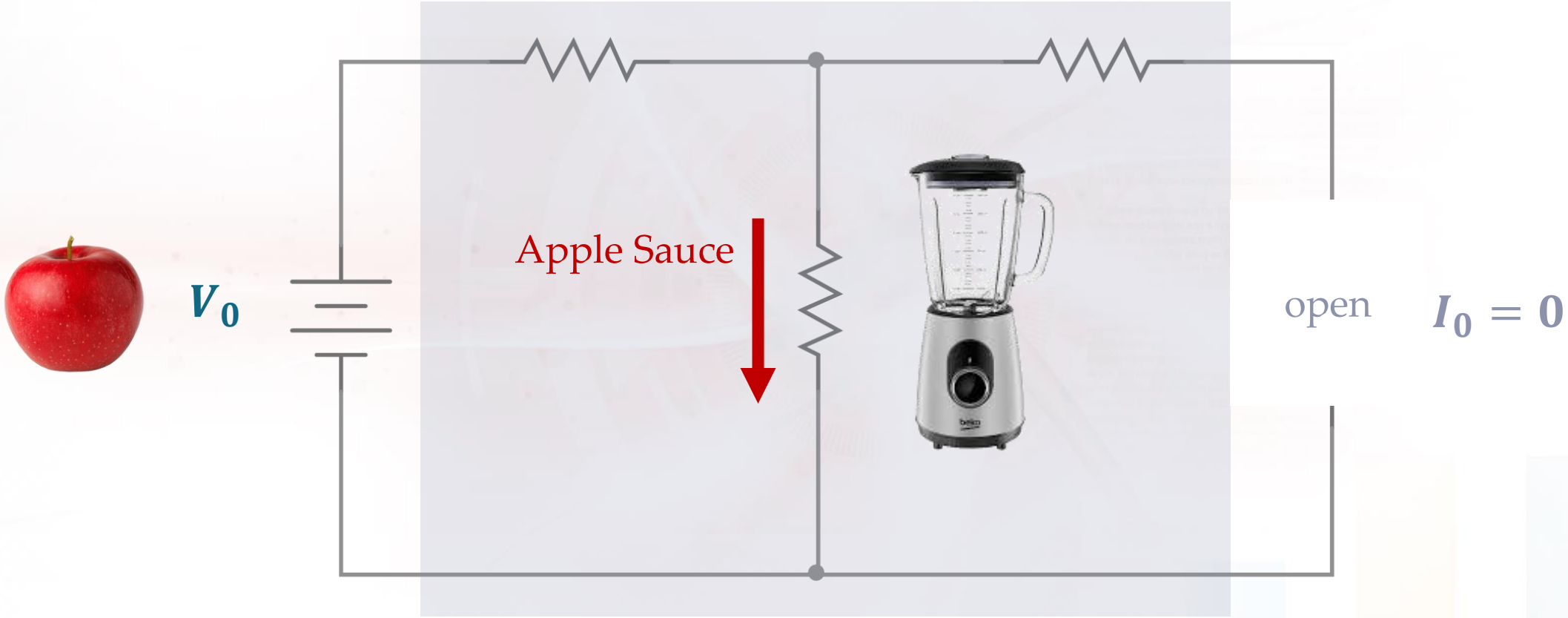
V_0
Apple Sauce
open
$I_0 = 0$

ANALOGY

ANALOGY

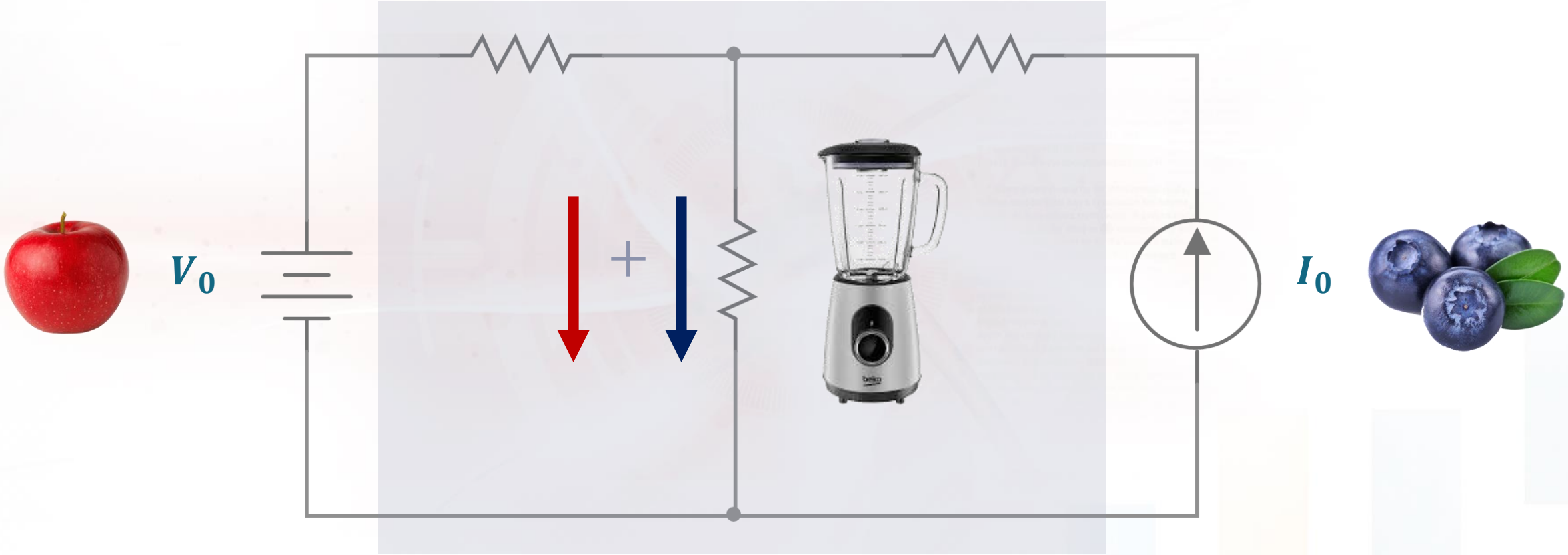

SUPERPOSITION THEOREM

The output of a **(linear)** circuit is determined by **summing** up the responses to each source acting alone (set other source(s) to zero)

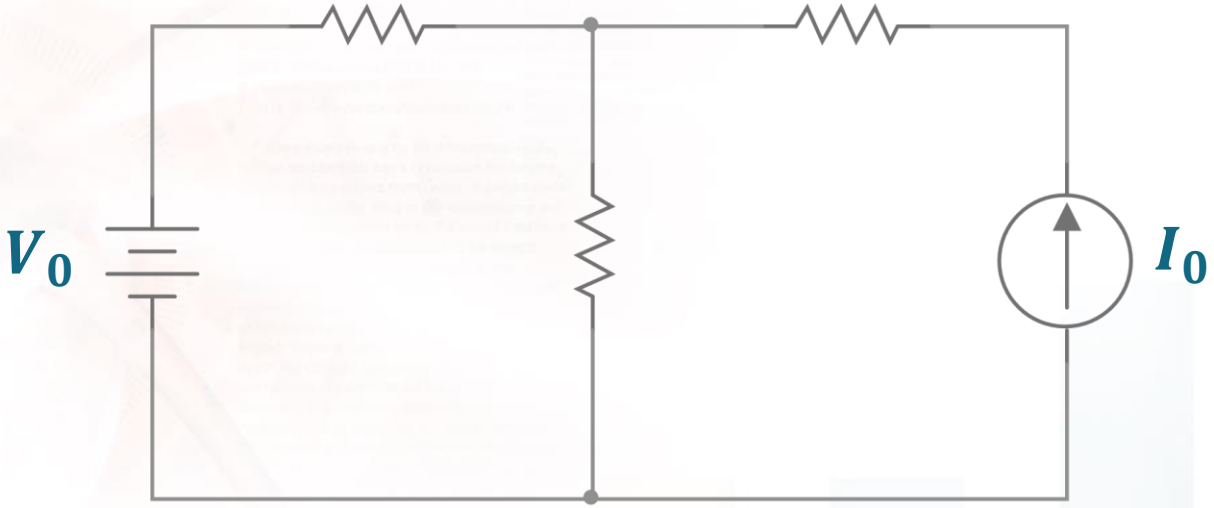

SET SOURCE TO ZERO

Voltage Source

Replace with **short** circuit equivalent

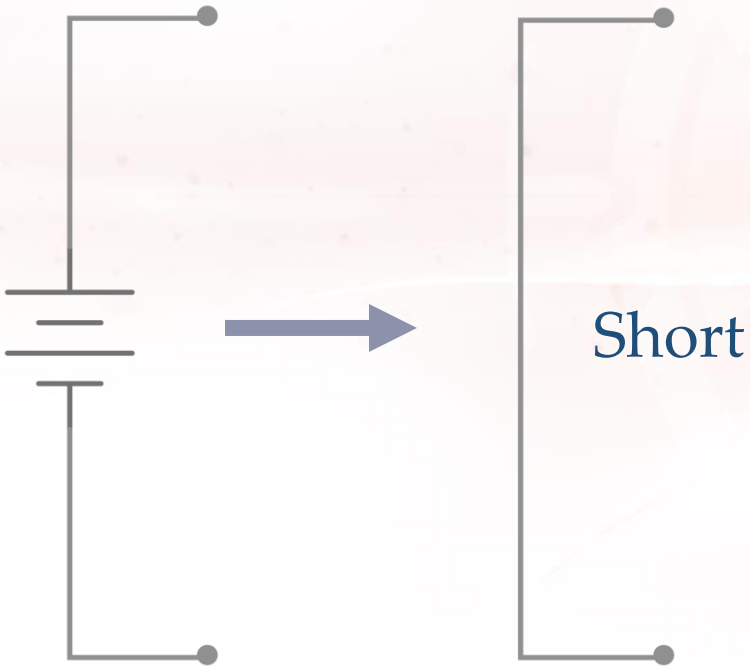

Current Source

Replace with **open** circuit equivalent

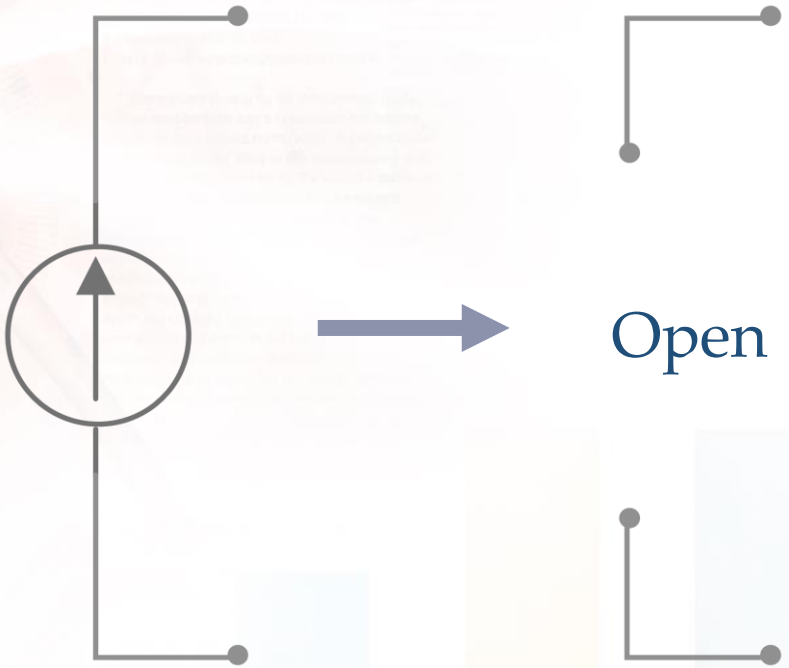

Determine the **voltage** drop of each resistor and the **current** that pass through each resistor in the given **circuit**.

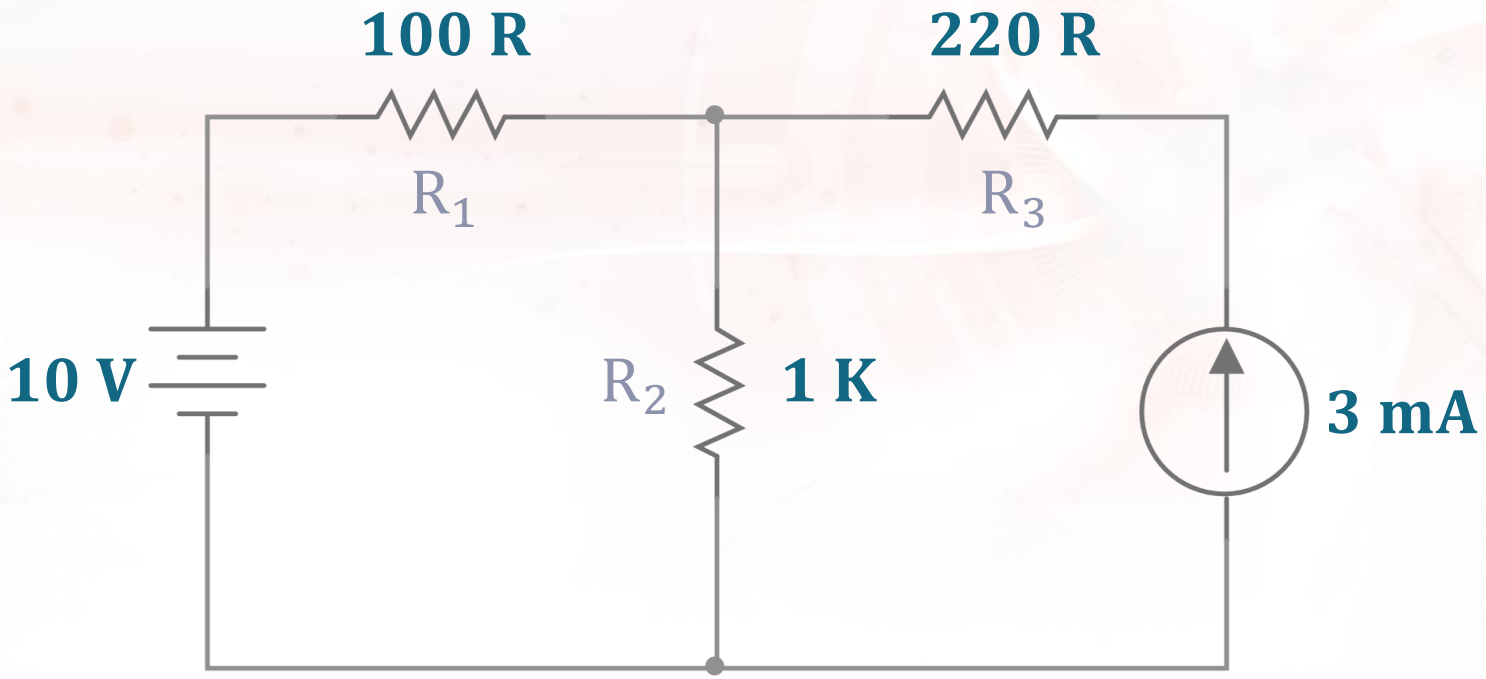

Determine the **voltage** drop of each resistor and the **current** that pass through each resistor in the given **circuit**.

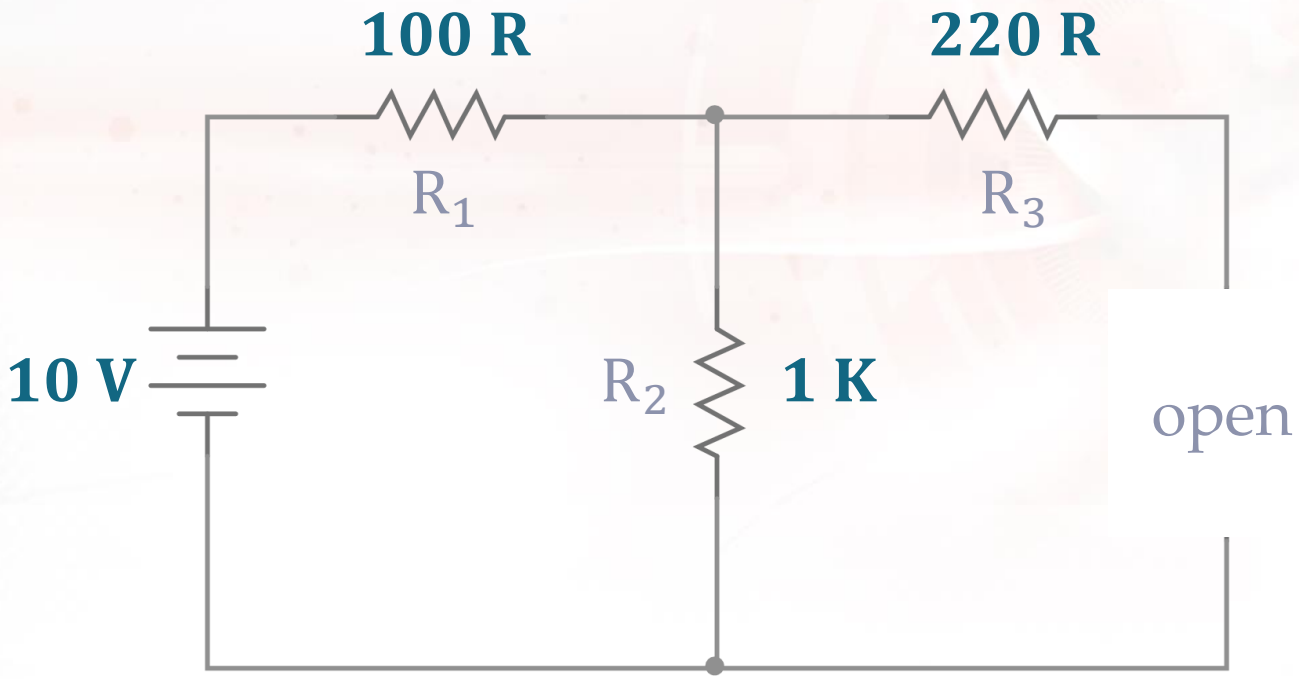

Determine the **voltage** drop of each resistor and the **current** that pass through each resistor in the given **circuit**.

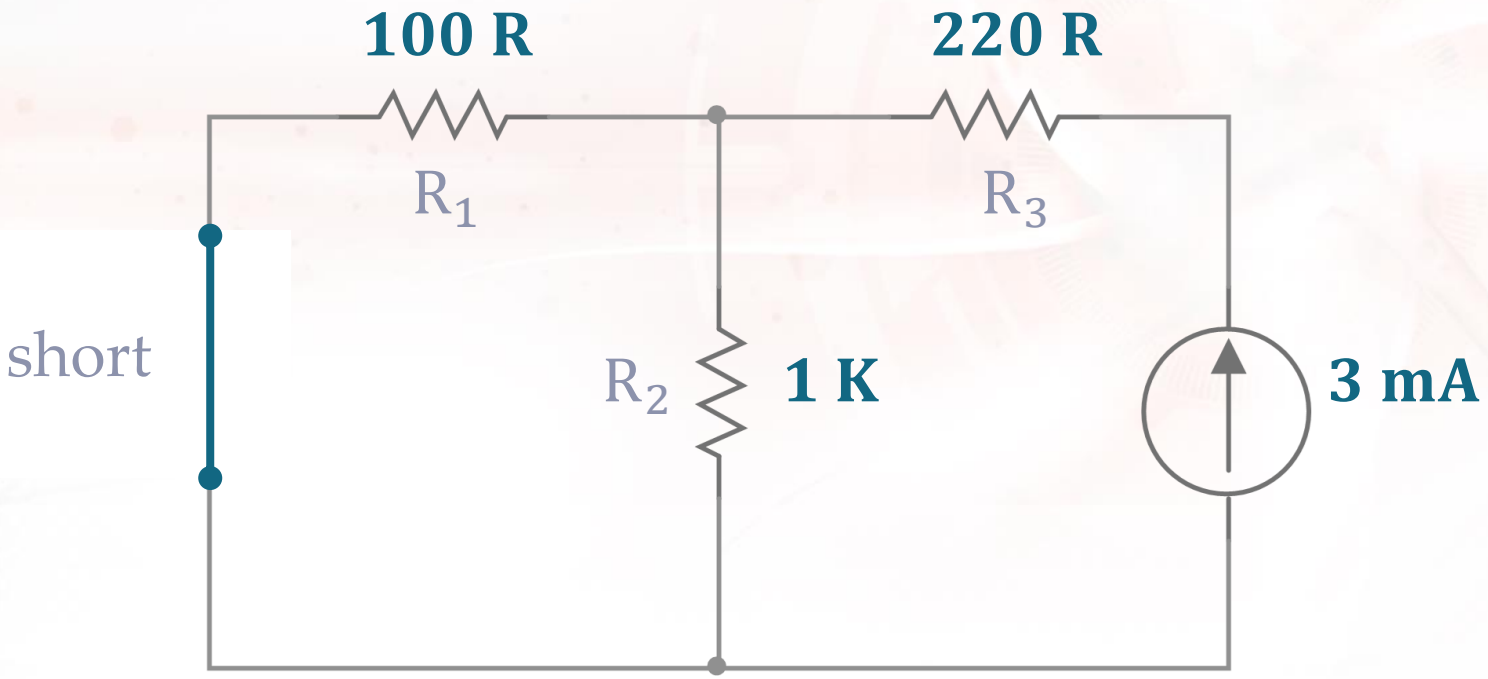

Determine the **voltage** drop of each resistor and the **current** that pass through each resistor in the given **circuit**.

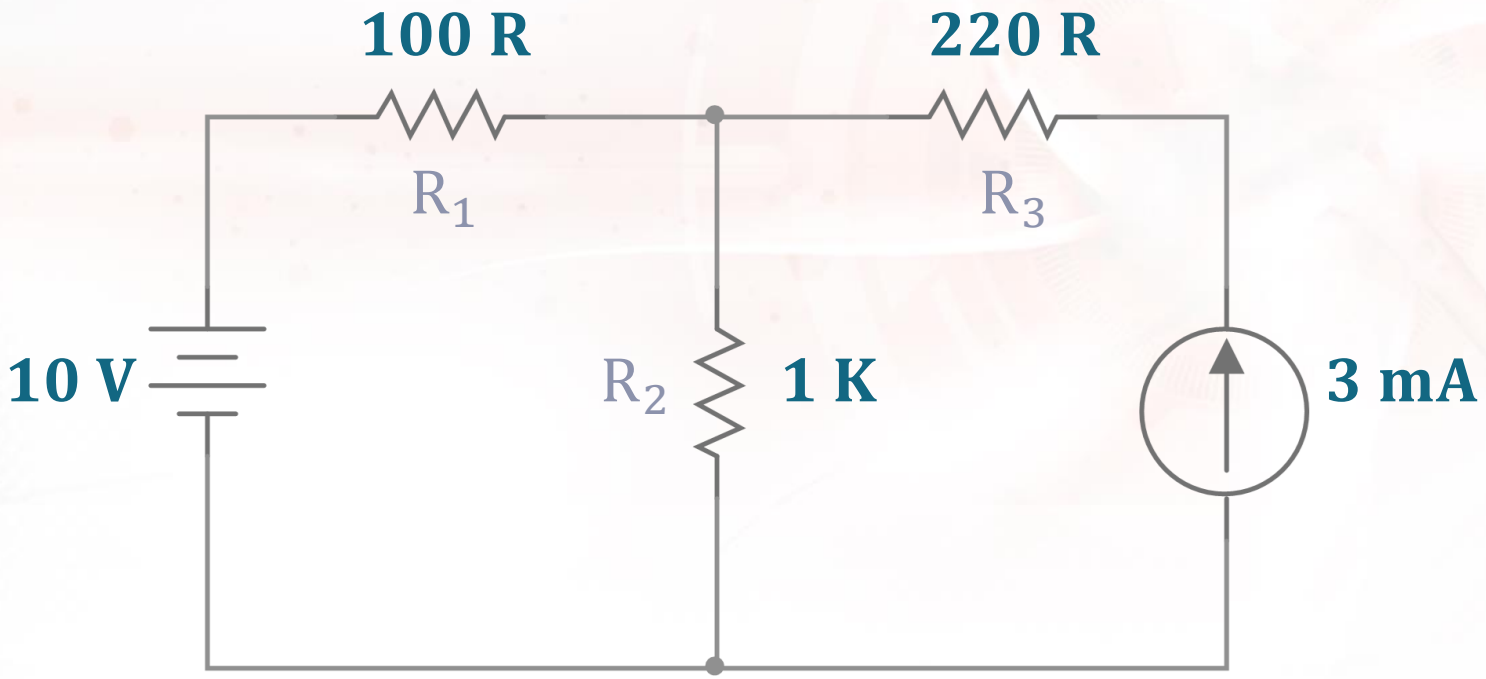

Determine the **voltage** drop of each resistor and the **current** that pass through each resistor in the given **circuit**.

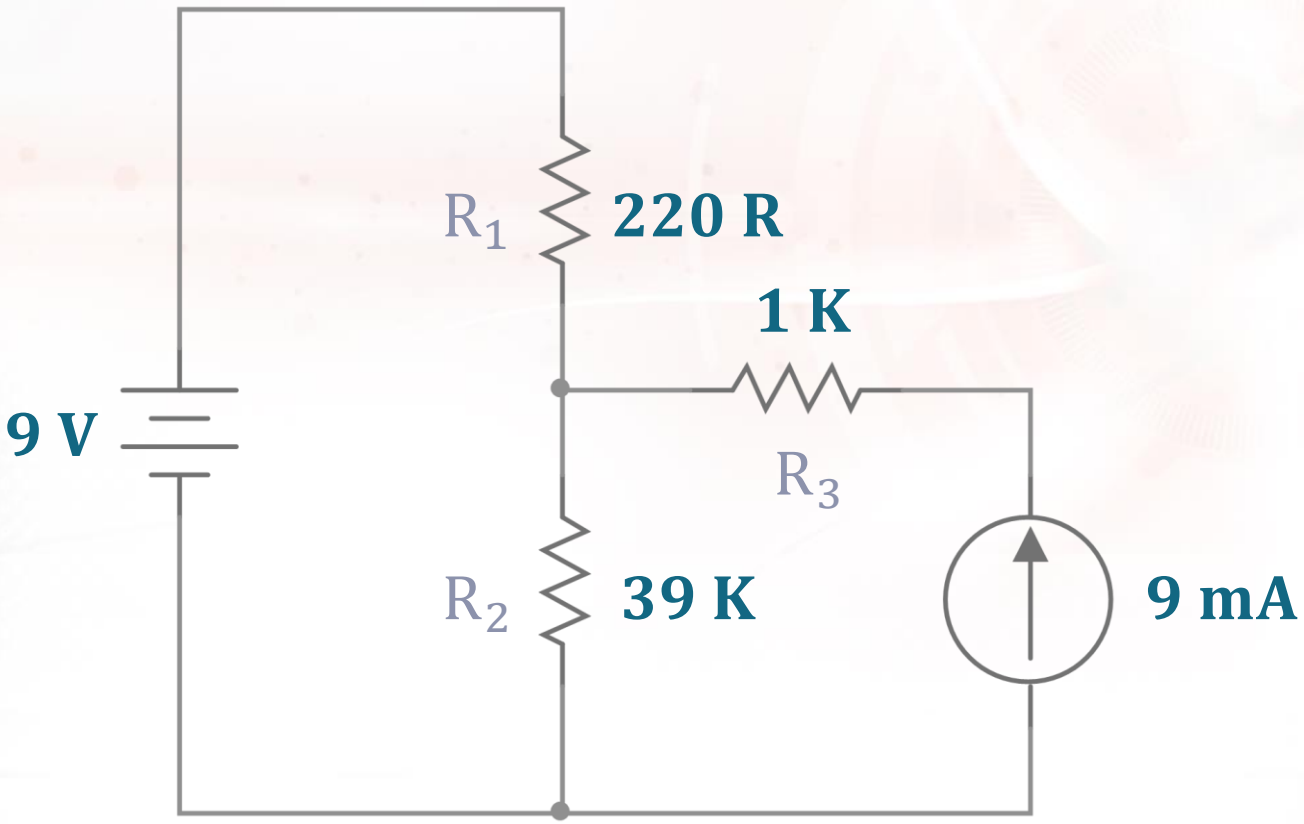

Determine the **voltage** drop of each resistor and the **current** that pass through each resistor in the given **circuit**.

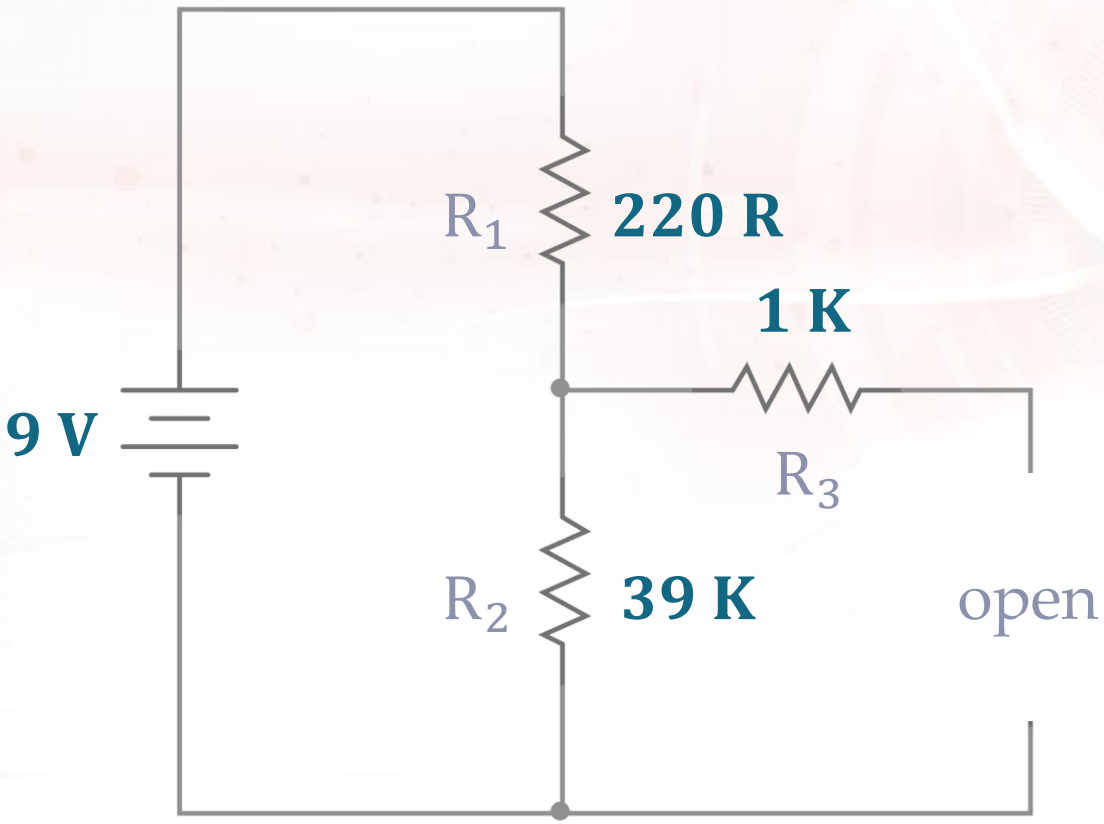

Determine the **voltage** drop of each resistor and the **current** that pass through each resistor in the given **circuit**.

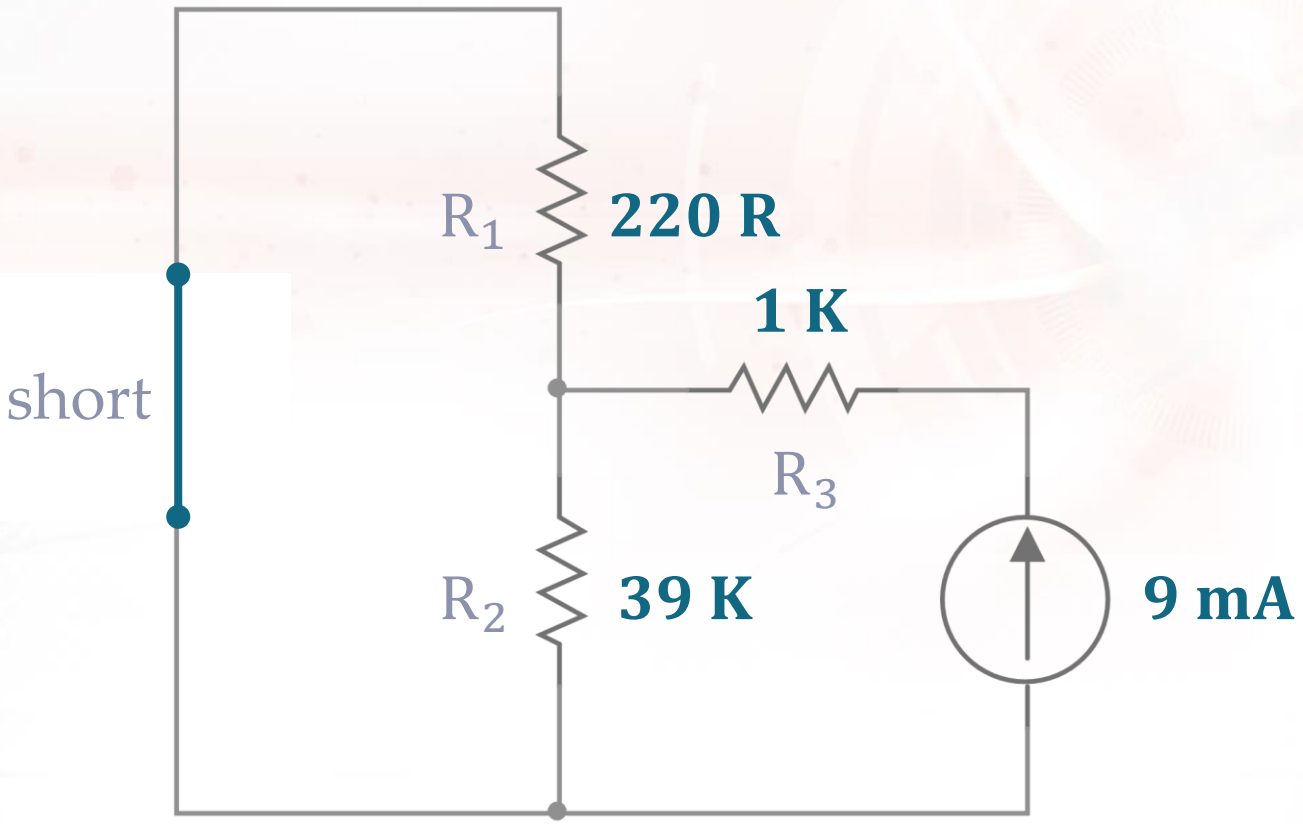

Determine the **voltage** drop of each resistor and the **current** that pass through each resistor in the given **circuit**.

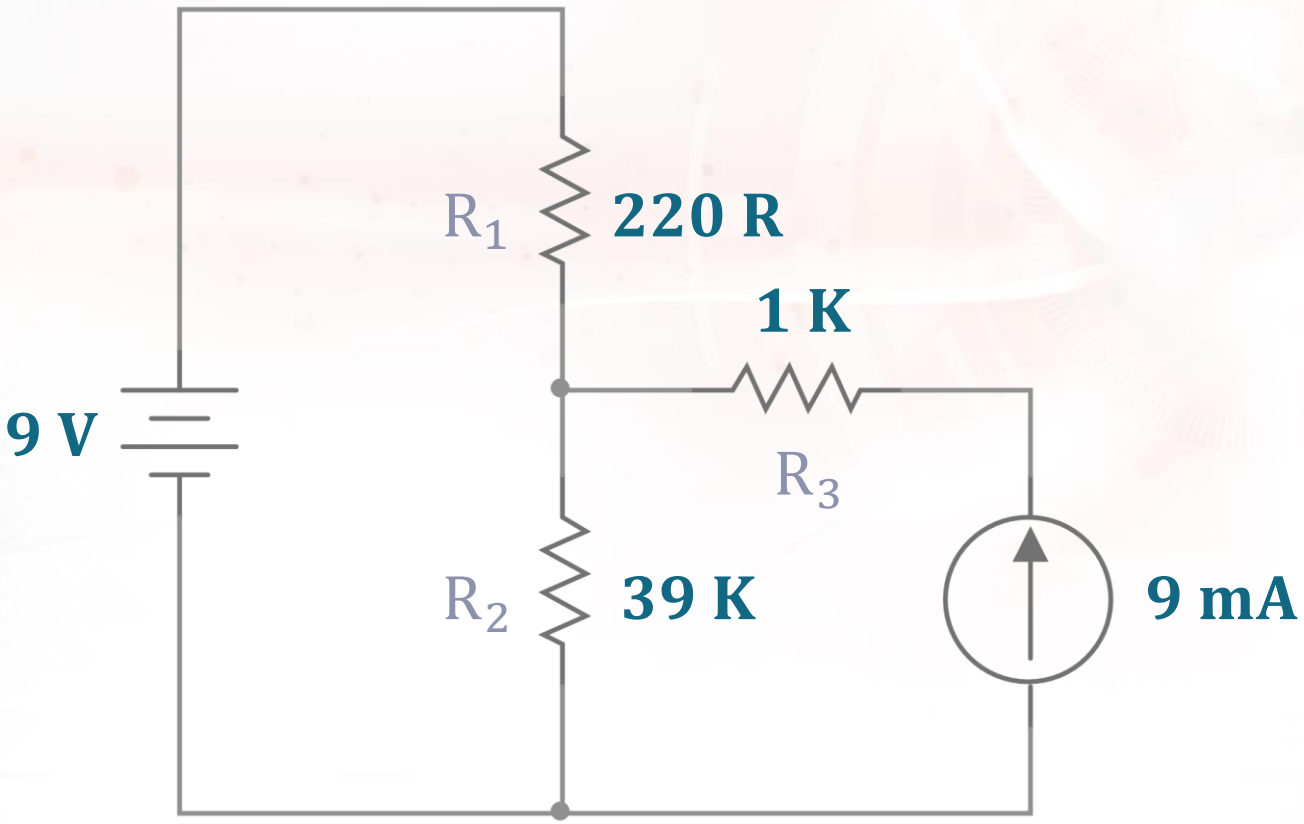

LABORATORY